100W Constant Voltage Slim-US Series

Features

- Class II，SELV，Independent
- Input Voltage 220-240VAC
- Protections: SCP/OLP/OTP
- Power Factor：≥0.95
- Efficiency：≥88%@12V;≥91%@24V/48V
- 5 years warranty

Applications

- LED strips

■Approve

CECB

SELV

◆ Description

US-100-XX LI2 is a 100W constant voltage LED driver that operates from 198-264Vac input with 12V、24V or 48V output voltage. With it's slim dimensions from 365 x 30 x 18mm. It is easy to integrate in LED strips product. To ensure trouble-free operation, protection is provided against output short circuit, over Load and over temperature.

◆ Model code

US-100-XX LI2

- Flicker-free
- Voltage
- Power
- Series

◆ Specification

Output	Constant Voltage	12VDC	24VDC	48VDC
	Current Range	0.833-8.33A	0.417-4.17A	0.208-2.08A
	Voltage Accuracy	±5%		
	Output HF current ripple(≥1KHz)	±1%		
	Output LF current ripple(≤120Hz)	±1%		
	SVM	≤0.4@Full Load		
	Pst	≤1@Full Load		
	Efficiency(Typ.)	≥88%	≥91%	
Input	Rated input voltage	220-240VAC		
	Range of input voltage	198-264VAC		
	Frequency(Hz)	50/60 Hz		
	Power Factor	≥0.95@Full load,230V		
	Input Current max	0.78A		
	Start-up time	＜0.5S		
	No Load Power	≤0.5W		
	THD (Typ.)	＜15%@Full load,230V		
Protection	Over Load Protection	105-150%		
		YES/Auto Resume		
	Short circuit Protection	YES/Auto Resume		
	Over Temperature Protection	YES/Auto Resume		
Environment	Operating Temperature	-20℃~+45℃		
	Humidity	20%-90%RH		
	Tc	90℃	85℃	
	Storage Temperature	-20℃~+45℃		
	Life time	＞50000h@Tc=75℃		
Surface	Dimension	365X30X18LXWXH)mm		
standards	EN 61347-1; EN61347-2-13; EN62384; EN55015; EN61000-3-2 ; EN61000-3-3; EN 61547;			
Others	ErP	EU 2019/2020		
	RoHS	RoHS (2011/65/EU) (EU)2015/863		
Note	1.All parameters NOT specially mentioned are measured at 230VAC input , full load and 25℃ of ambient temperature. 2.Ripple & Noise are measured at 20MHz of bandwidth by using a 300mm twisted pair-wire terminated with a 0.1uF & 47 uF parallel capacitor. 3.Data are typical values obtained from test samples. 4.Dimmers are not recommended for this product.			

◆ Wiring diagram

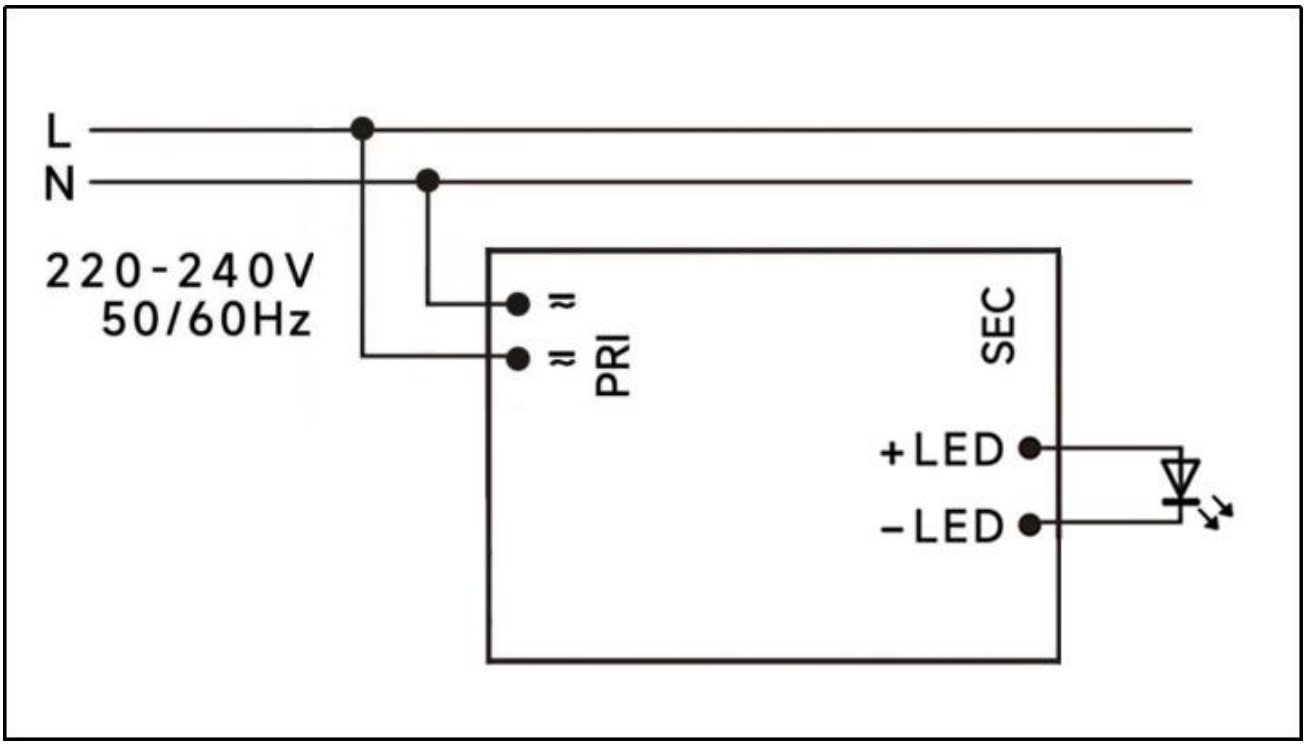

◆ 2D diagram

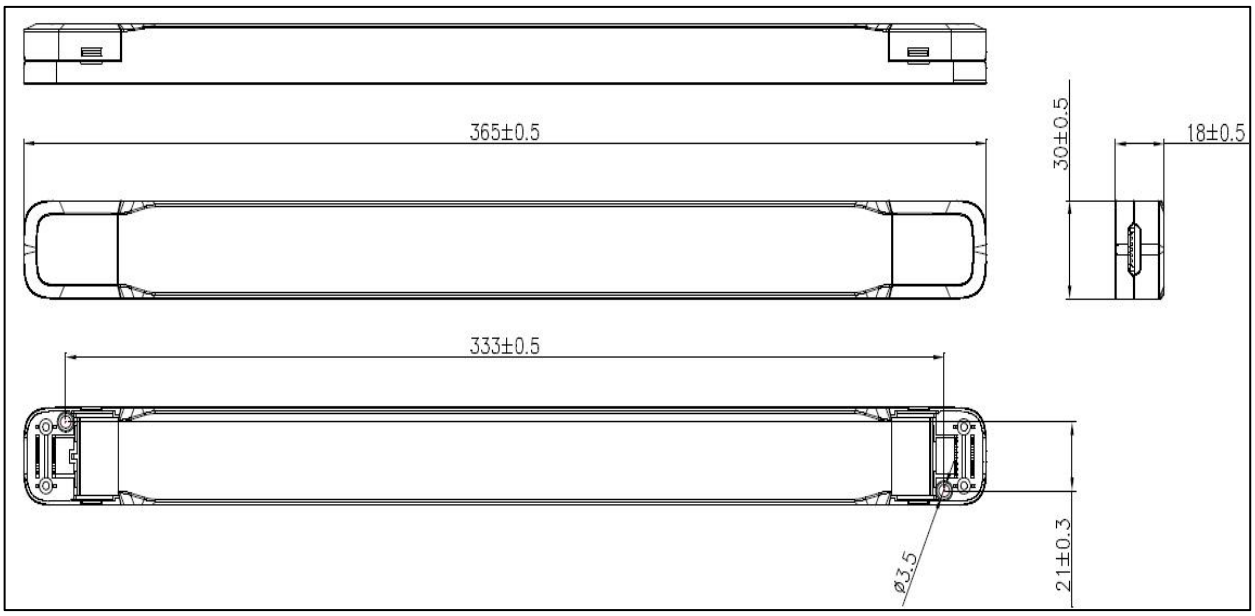

◆ Curve for US-100-12 LI2

Lifetime vs. Temperature Curve

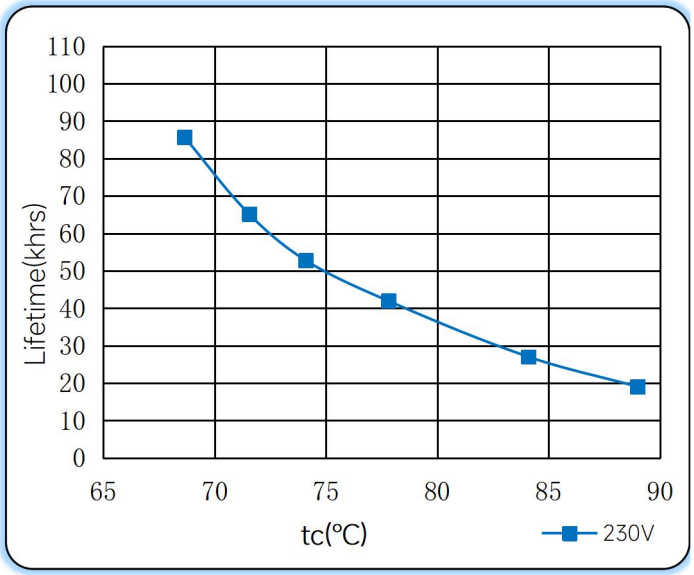

Efficiency vs. Load

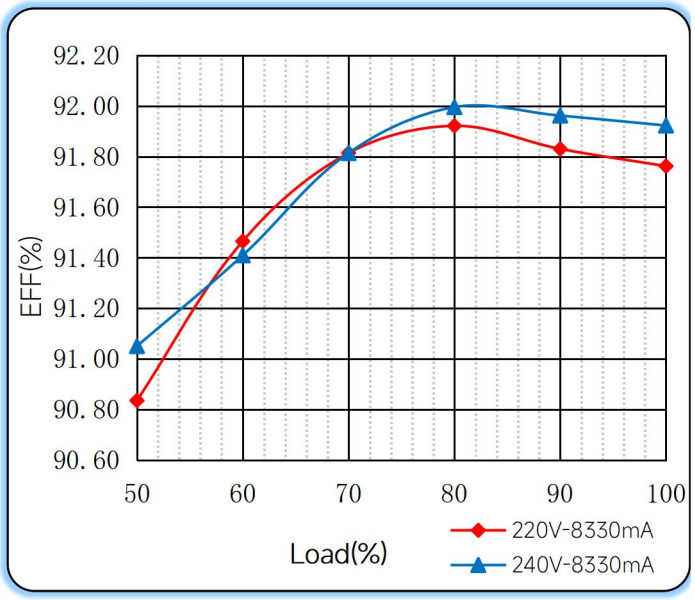

Power Factor Characteristics

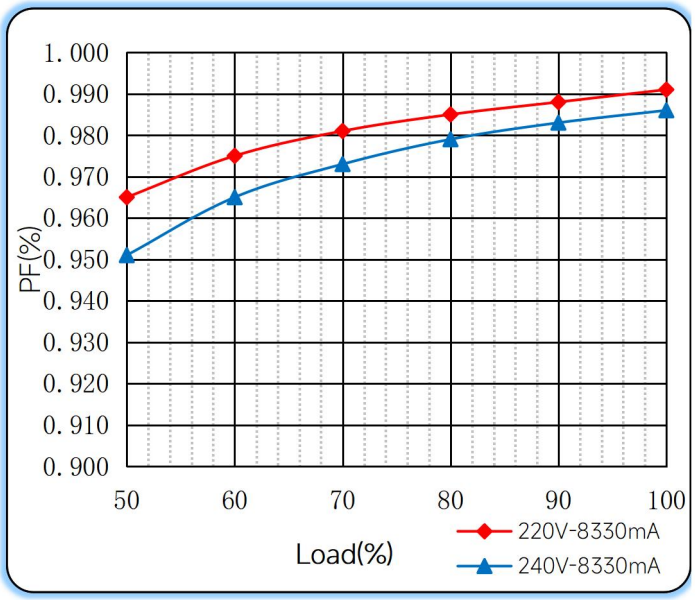

THD vs. Load

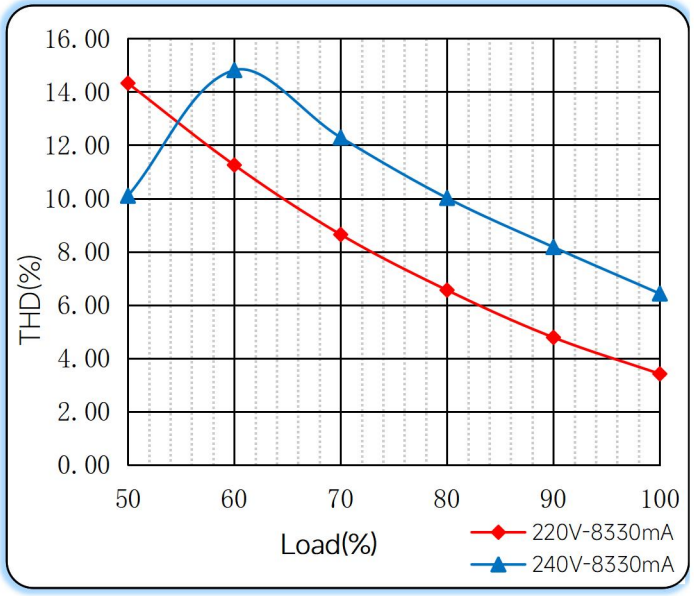

◆ Operating window

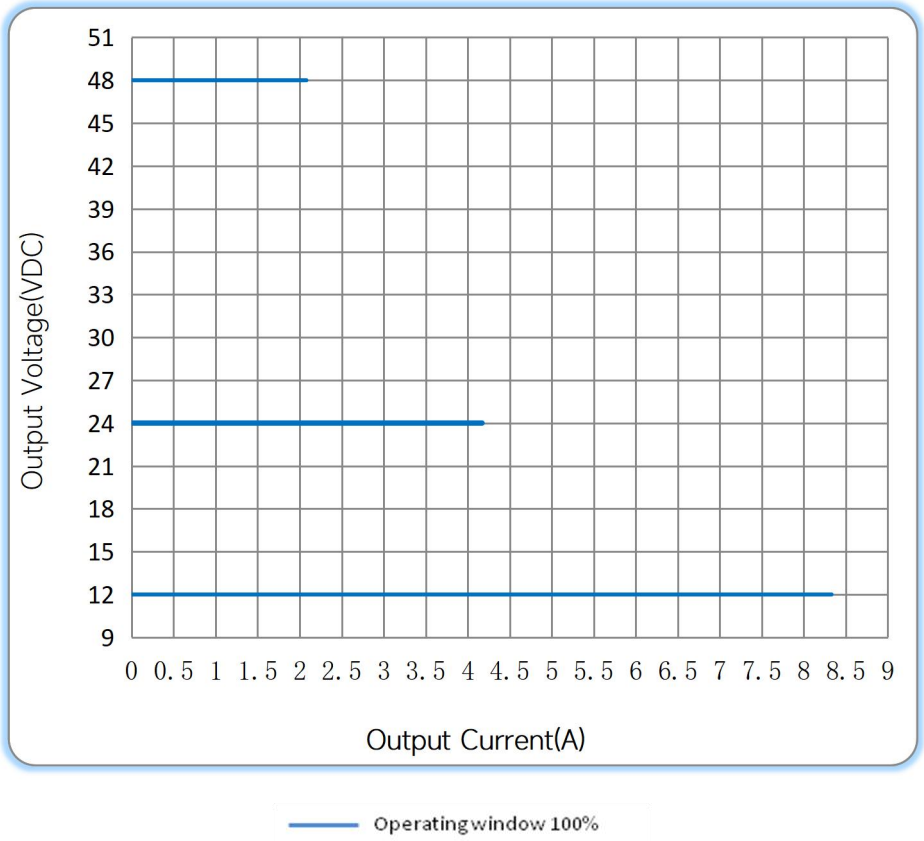

◆ Revision Updates

ITEM	BEFORE	AFTER	VERSION	DATE
Initial			A	2022/05/15
Name	US-100-XX LI1	US-100-XX LI2	B	2023/06/28

Tel: +86-0757-86256822, +86-0757-86256831
E-mail: sales@eaglerise.com
Website : https://lighting.eaglerise.com

EAGLERISE Manual